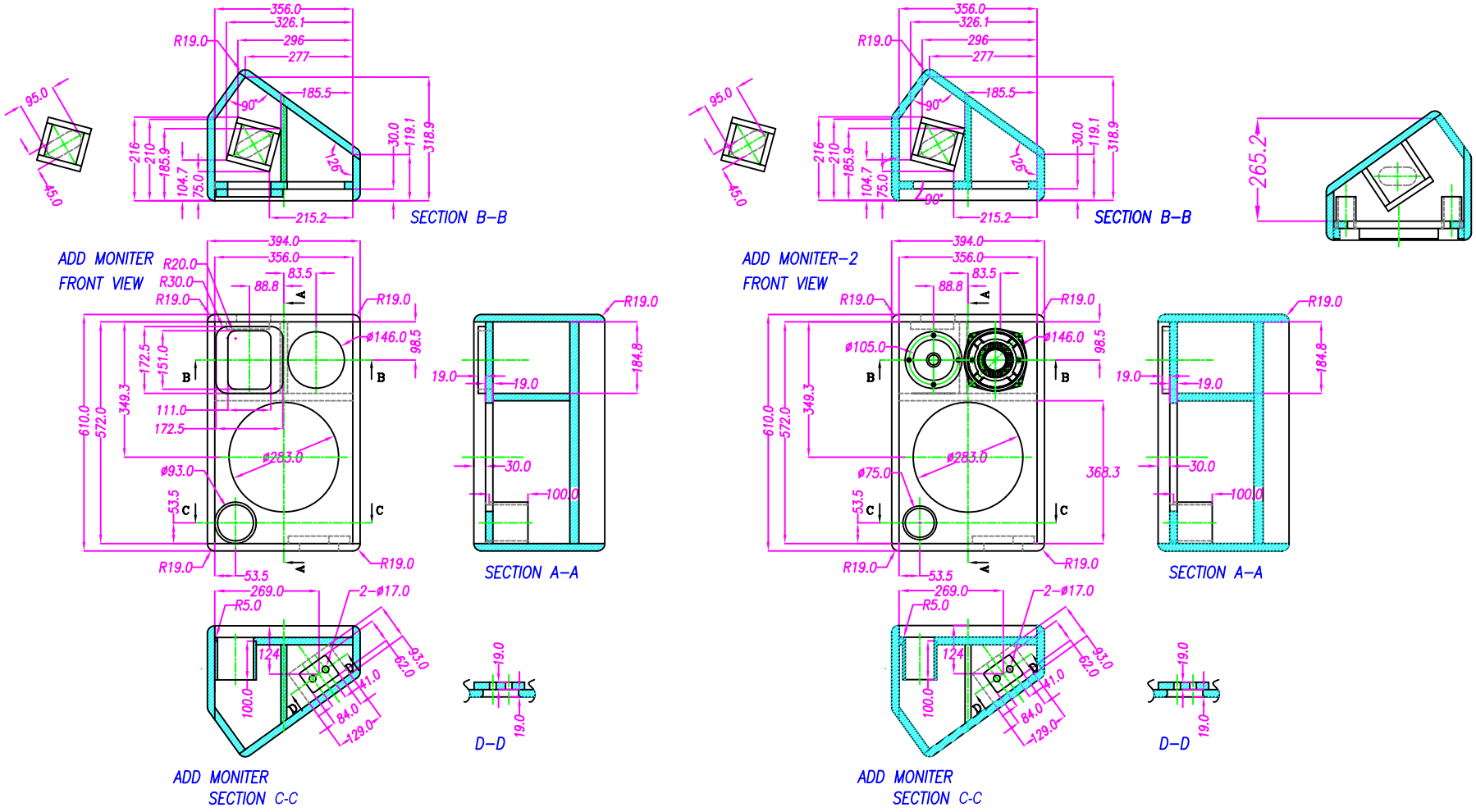
ADD MONITER
FRONT VIEW
SECTION B-B
SECTION A-A
ADD MONITER
SECTION C-C
D-D
ADD MONITER-2
FRONT VIEW
SECTION B-B
SECTION A-A
ADD MONITER
SECTION C-C
D-D
265.2