44.94L

44.94L

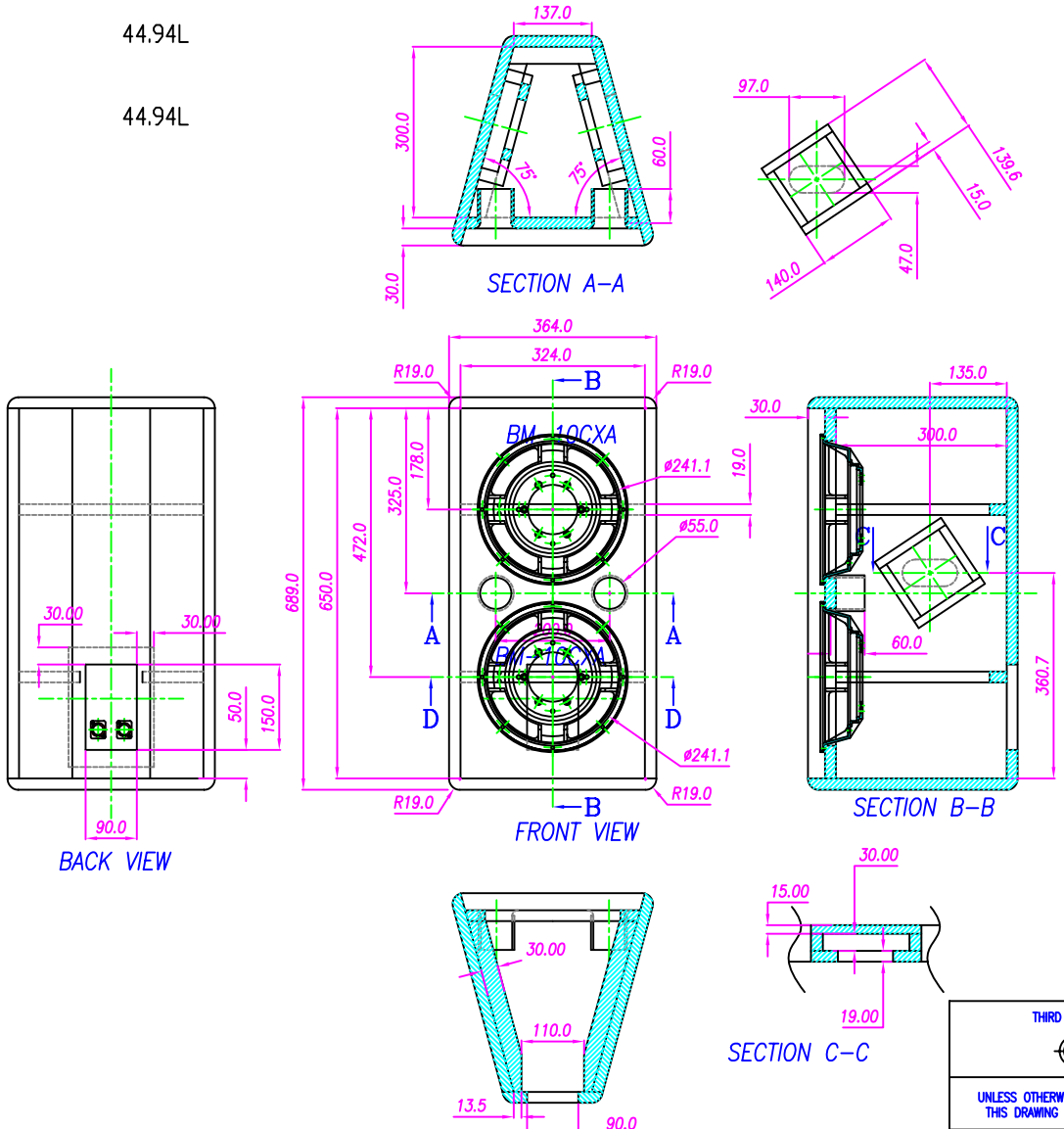

REVISIONS			
REV.	DATE	DESCRIPTION	NAME
A	05/09/03	DRAFT	N.K

NOTES:

1. MATERIAL:
2. FINISH:
3. DIMENSIONS: DIMENSIONS ARE IN MILLIMETERS.
4. CONTROL CHARACTERISTICS (■).
5. TOLERANCES: UNLESS OTHERWISE SPECIFIED.

DECIMALS	ANGULAR
X.X ±0.3	±1°
X.XX±0.09	

THIRD ANGLE PROJECTION

UNLESS OTHERWISE SPECIFIED INTERPRET THIS DRAWING PER ANSI Y14.5M-1982

NOTICE
P.AUDIO PROPRIETARY RIGHTS ARE INCLUDED HEREIN. THIS INFORMATION MAY NOT BE COPIED, TRANSFERRED OR DISCLOSED EXCEPT AS

ENGINEER		DATE 05/09/03
Q.C.		DATE 05/09/03
APPROVED		DATE

P.AUDIO SYSTEM CO.,LTD.
BANGKOK, THAILAND

DESCRIPTION

SCALE	SIZE	CLASS	DRAWING NO.	REV.
1:8	A3	PT	10X2 CXA	A