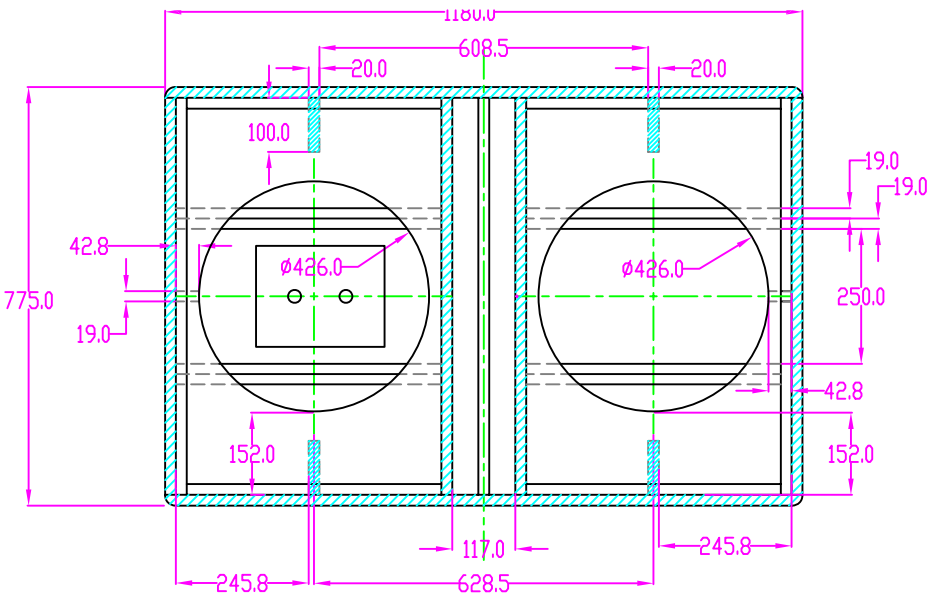

FRONT VIEW

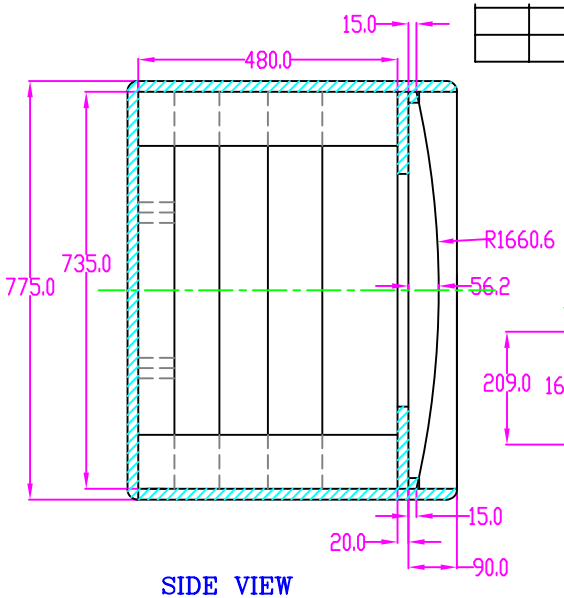

SIDE VIEW

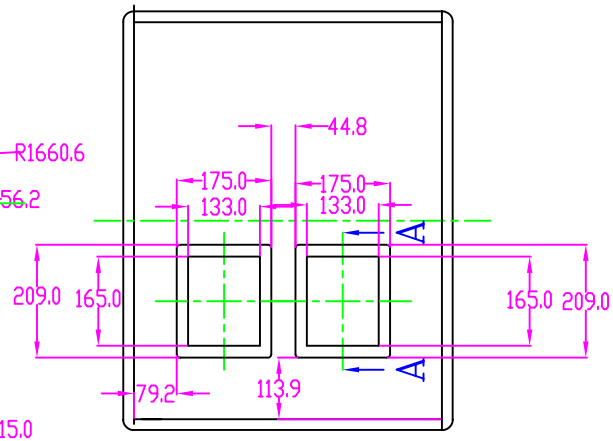

SIDE VIEW

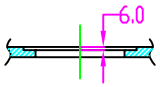

A–A

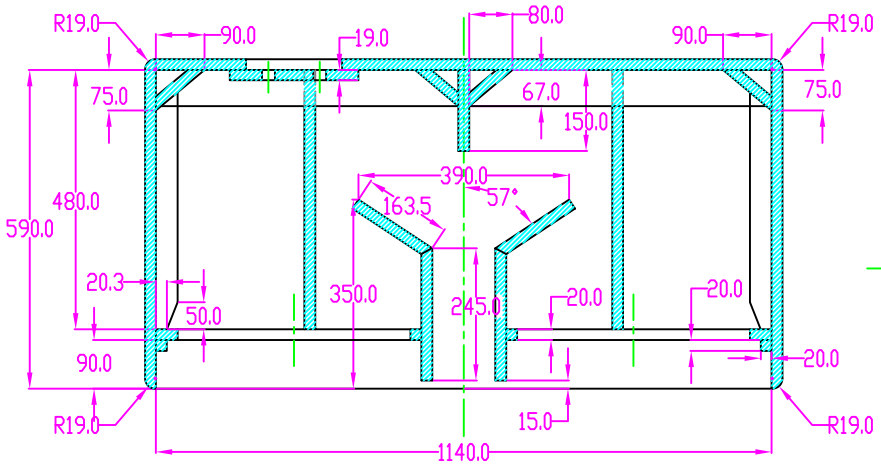

TOP VIEW

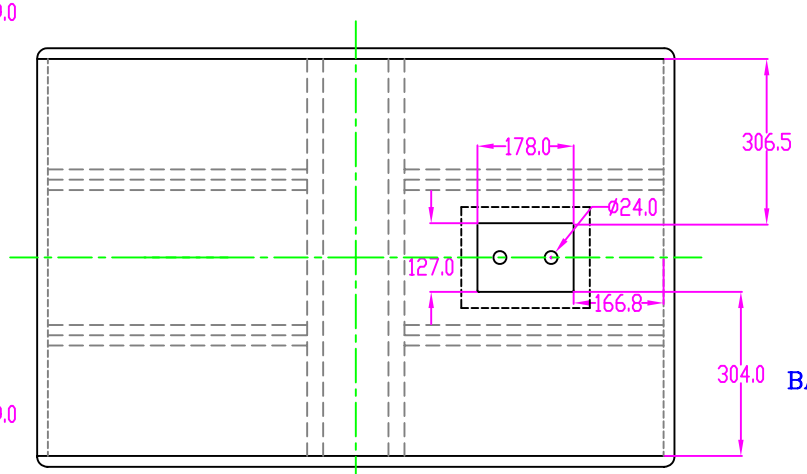

BACK VIEW

NOTES:

THIRD ANGLE PROJECTION | ENGINEER